FTdx5000 to SteppIR and SPE 2K-FA with Relay Interrupt

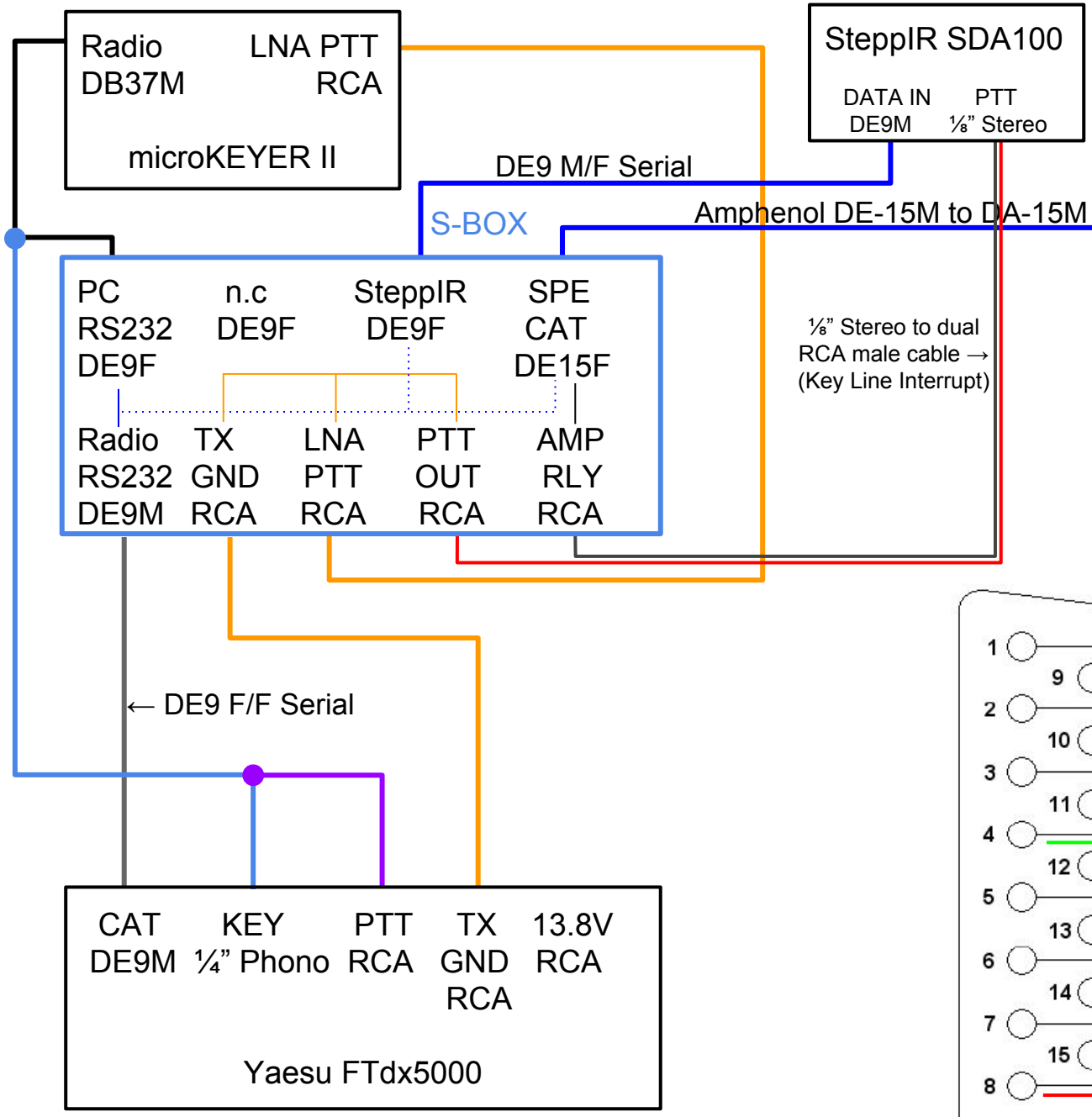
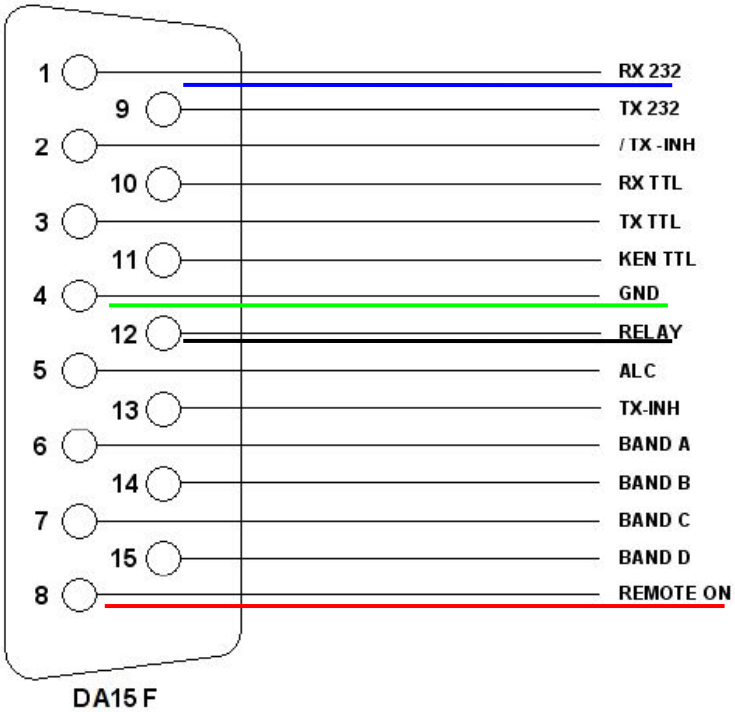
SPE CAT DA15F